KLINGER Portugal

KLINGER MONOBALL KHO

Fully welded ball valve
DN 15 - 250

www.klinger.pt


GUMPOLDSKIRCHEN
AUSTRIA

KLINGER FLUID CONTROL

Today for tomorrow

As a subsidiary of the KLINGER Group, KLINGER Fluid Control has been developing, manufacturing and maintaining high-quality industrial valves at the business location Gumpoldskirchen/Austria for more than 125 years. Via the global distribution and service network, KLINGER Fluid Control offers both standardized and tailored products and services as well as solutions for customers around the globe.

Products from KLINGER Fluid Control are characterized by their high level of reliability as well as by an above average lifecycle at a simultaneously very low total cost of ownership (TCO). As a trusted solutions partner, KLINGER Fluid Control creates customer benefits with added value with the focus on the following core competences:

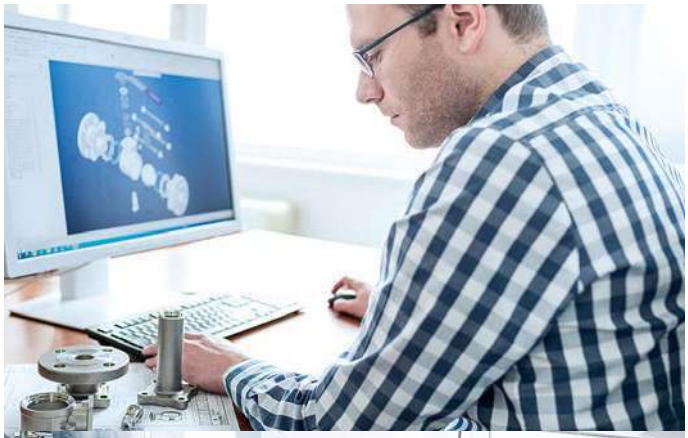

ENCOMPASSING SERVICE

» Application expertise
» Product trainings
» Fast quotation and order processing
» Customer-specific special solutions
» Supply of spare parts
» Valve maintenance
» On-site technical support

INNOVATIVE SOLUTIONS

» State of the art development tools
» Product development for different areas of application
» Automation solutions
» Product tests in the company-own technical center
» A wide range of certificates and approvals

OPERATIONAL EXCELLENCE

» Flexible production
» Transparency in the supply chain
» Short delivery times
» ISO 9001 certified quality
» ISO 14001 as well as EMAS certified environmental management system

MONOBALL KHO

Developed for the toughest application scenarios

PRODUCT ADVANTAGES

- Maintenance-free
- Multi-layer, durable operating stem seal
- Certified according to EN 488:2019 and EHP003
- Meets the requirements of the AGFW worksheet FW 401 – Part 5
- Blowout-proof operating stem
- Elastically pre-stressed sealing elements with stainless steel belleville washer
- Long heat-insulating shaft
- Operating Shaft made of stainless steel
- High degree of resilience against pipework forces
- Supports pressurization on both sides

SPECIAL TYPES

- Pre-insulated design for thermal insulated pipe systems
- Pre-insulated drain and vent valve made of stainless steel for the plastic casing pipe systems
- Top flange in accordance with EN ISO 5211 for automation
- Full solution with venting and draining, insulation and leak warning wires

PRODUCT DETAILS

PN	16 - 40
DN	15 - 250
Material	Cast steel, stainless steel
Temperature	-5 °C bis +200 °C
Design	Welding ends, flanges, threaded stud, full and reduced bore
Type	Fully welded ball valve

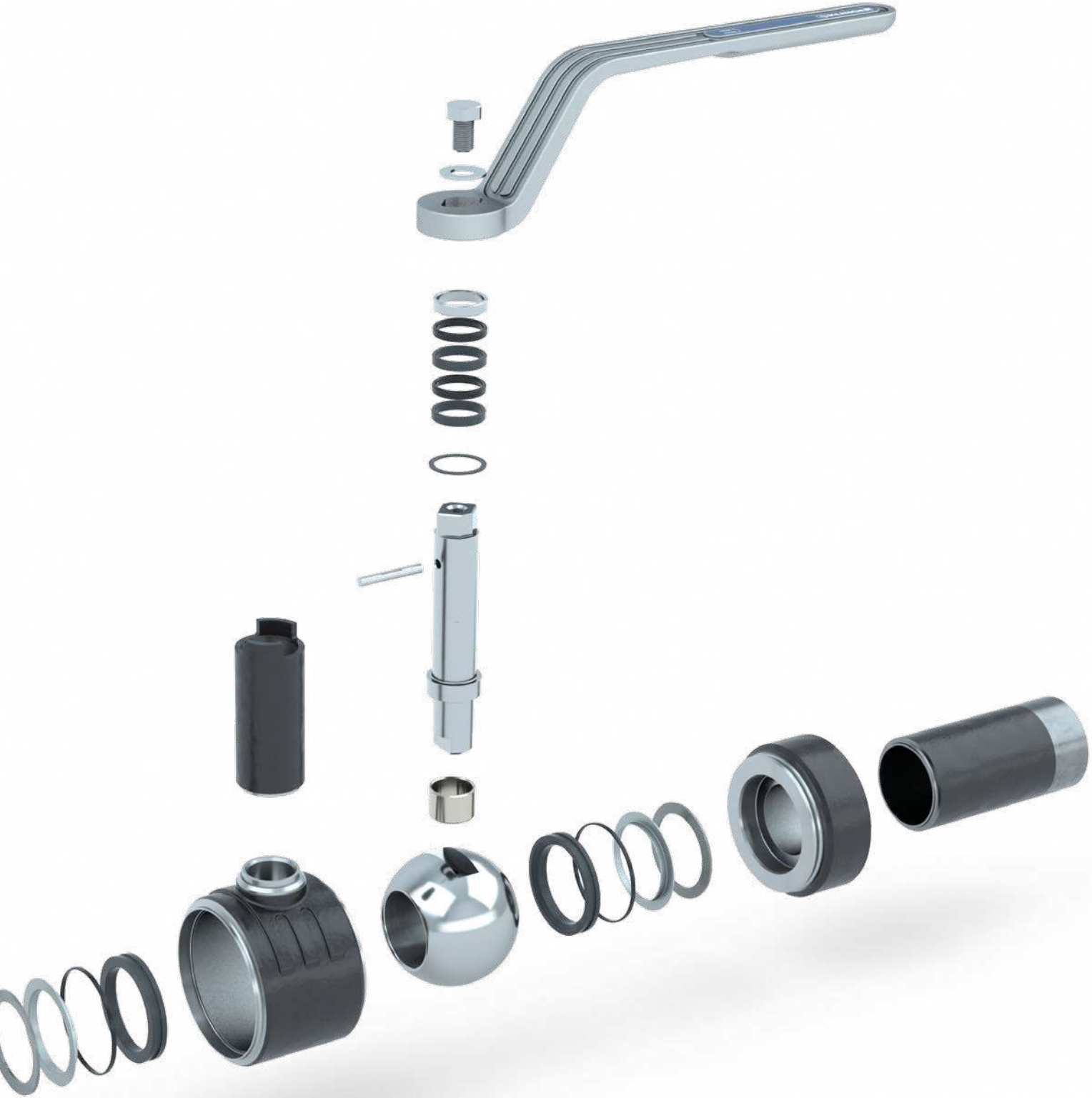

ONE-PIECE FUNCTIONALITY

The MONOBALL KHO in detail

The Monoball valve series has been successfully used in the field of district energy and industrial technology for more than 30 years. Continuing this success, we have brought the Monoball valve series to the next technological level. Durability, functionality, no maintenance required and user-friendliness were the top priorities during development. The new KLINGER Monoball KHO is a fully welded ball valve that is used in district energy, for heating and cooling technology and for plant engineering.

SEALING SYSTEM

The permanently elastic, maintenance-free sealing system comprises corrosion-resistant, pre-stressed stainless steel belleville washers as well as graphite-reinforced PTFE sealing rings. This ensures reliable, bi-directional tightness. An additional high temperature-resistant o-ring guarantees leak tightness between the sealing ring and the body and negates the entry of media from the cavity (Fig. 1). The pressure of the medium presses the ball against the downstream sealing element. The upstream, triple-chambered sealing ring is pressed against the ball by the pre-stressed belleville washer. The pre-stressed belleville washers ensure an evenly distributed contact pressure on the ball. This configuration leads to a bi-directionally tight valve, which is excellent in the event of temperature and pressure fluctuations.

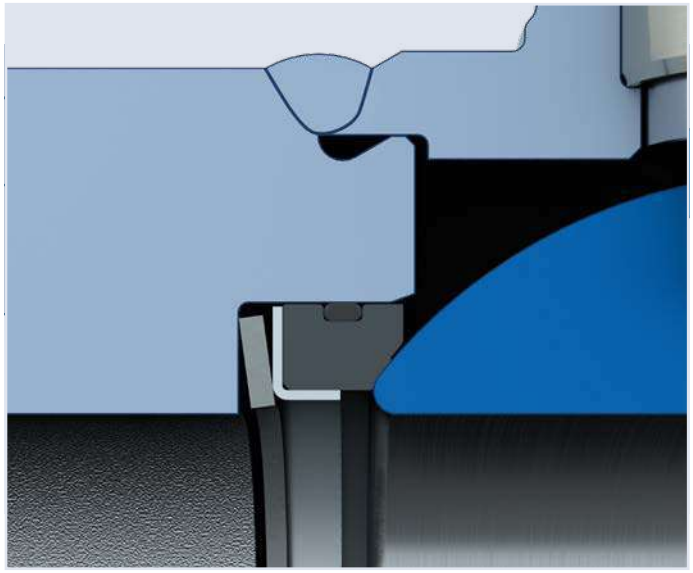

Fig. 1: Details of the sealing system

BALL

In order to ensure a turbulence-free laminar flow, the KLINGER Monoball KHO relies on a stainless steel ball with a cylindrical bore. Plant operators therefore not only benefit from lower pressure losses, less required pump capacity and reduced operating costs, but also contribute to climate protection.

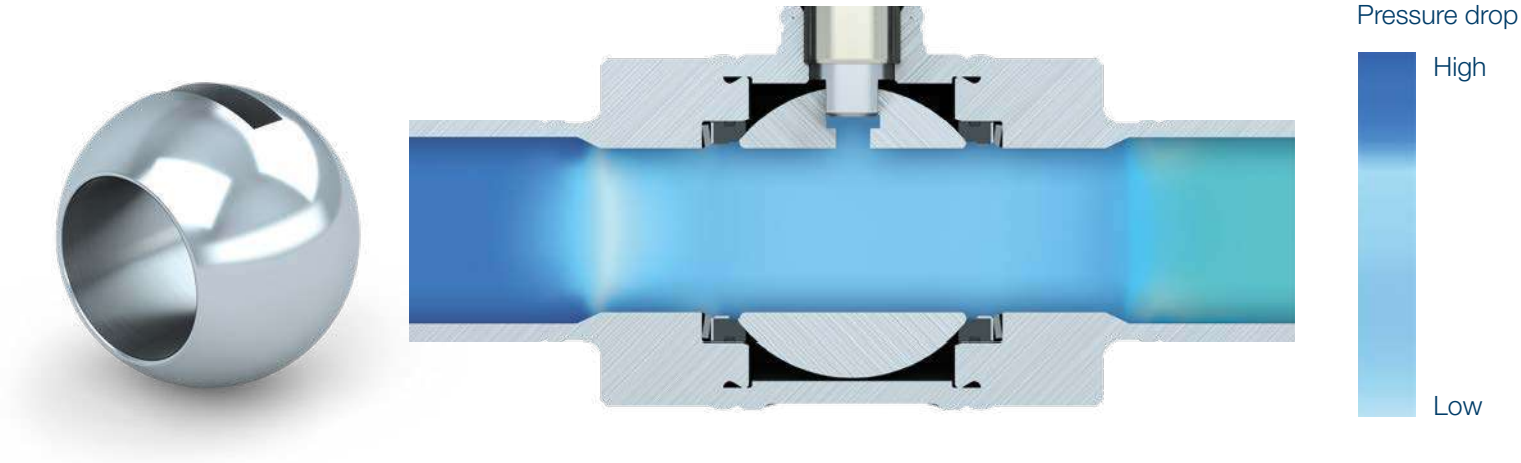

Fig. 2: The Monoball KHO offers low pressure losses

DURABILITY AND RELIABILITY

The MONOBALL KHO in detail

BODY

The stress-optimized ball valve body with a cast-on stem is made from massive carbon- or stainless steel casting and is able to withstand the greatest tensile- and pressure forces. The stress-optimized execution is facilitated by means of welding seams, which are full penetration welded across the cross-section. Furthermore, corrosion-related tension cracks are effectively avoided by means of positioning in low-tension areas. All welding seams on the fully welded body manufactured in a fully automated manner with the aid of state of the art welding technologies. A penetration-welded seam is used for the stem extension at the already cast-on stem: Compared to a standard hollow weld, it facilitates an optimal welding connection.

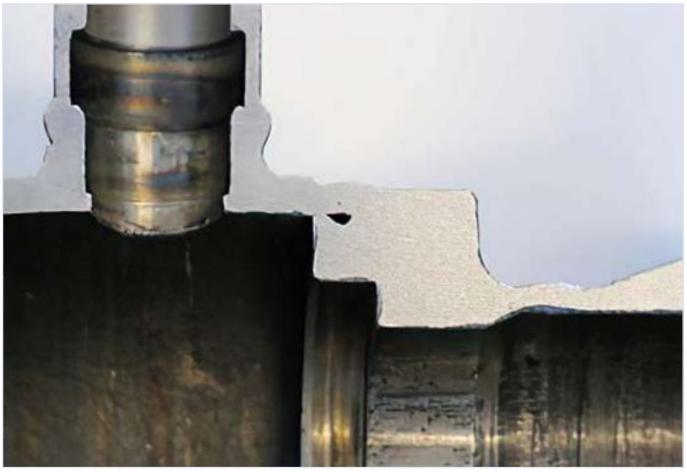

Fig. 3: Micrograph of the weld seam

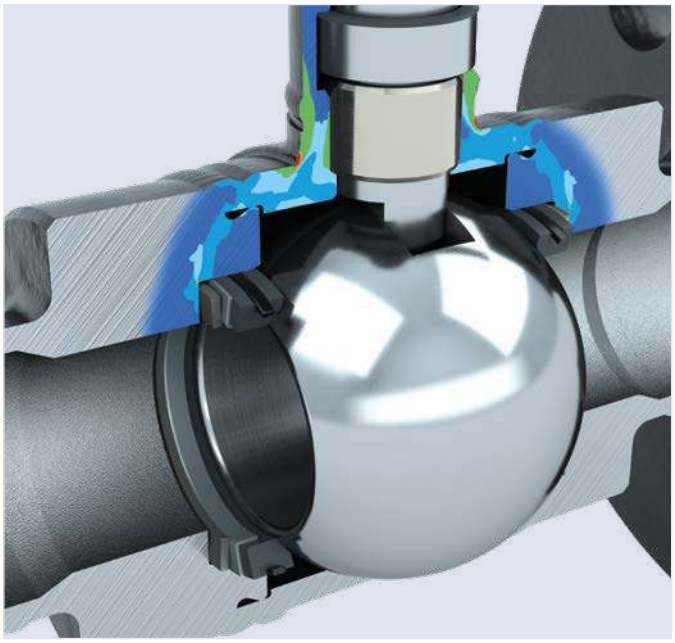

STEM SEALING

The double stem-sealing execution consists of a flat gasket (KFC-25) and two high temperature-resistant, optimally chambered O-rings made of FKM. This results in zero maintenance, lowers operating costs and guarantees reliability.

A bearing bush ensures optimal mounting of the blow-out-proof stainless steel shaft and thus a long service life of the valve. If required, the top O-ring can be removed from the depressurized pipe system without disassembly of the valve.

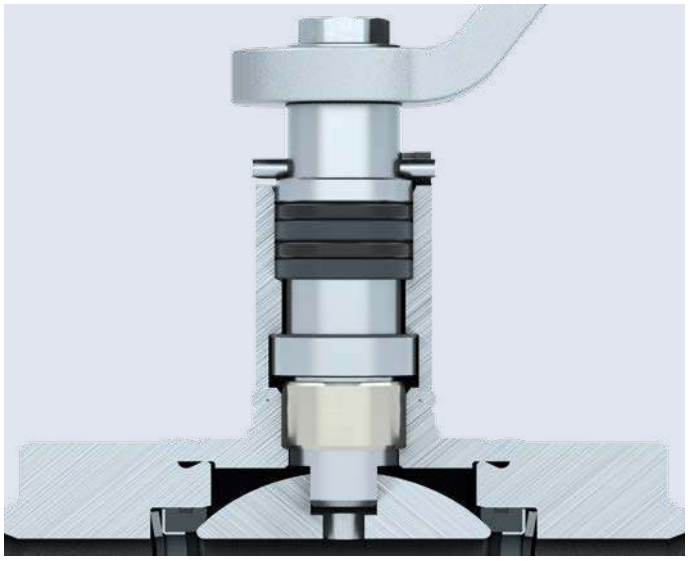

HIGHEST REQUIREMENTS

Certification according to EN 488:2019

The requirements regarding underground shut-off valves have been continuously increased over the years to increase operational safety. This is realized by means of special ball valves with an especially robust and deformation-free body. The KLINGER Monoball KHO series of ball valves was specially designed for the utilization in pipe systems, which are operated with high external loads. The valve is characterized by its massive cast design as well as a fully welded body optimized to withstand major forces. As a consequence, neither cold-formed sheet metal parts, nor pipe segments are used. Furthermore, welding seams are not located at positions critical in terms of force progression. Instead, an optimized positioning of the body welding seams negates the generation of contact corrosion. These measures result in a highly rigid valve body and ensure that no external loads exert an influence on the sealing system. The KLINGER Monoball KHO meets the requirements of the EN 488:2019 standard and those of the AGFW worksheet FW 401. EN 488 defines the technical requirements as well as the test procedure for these shut-off valves, which are located underground in district heating networks. The predecessor version of the standard from the year 2011 already defined increased pressure forces as well as new side loads for valves. Compared to the 2011 and/or 2015 revisions, several requirements have again been tightened in the current version. The number of operations, for example, has been increased for the type-testing process, all tests must be carried out on the same valve and the last 100 mm of the spindle / stem construction must be executed in a corrosion-protected manner. KLINGER Monoball KHO ball valves have been successfully tested on the company-own multi-function test bed under inclusion of the extended requirements of EN 488:2019.

LIFE CYCLE COSTS (LCC)

Cost efficiency and reliability at its best

The real cost of a valve is not just the purchase price, but includes the expenses incurred during the entire life of the valve. The costs due to pressure drops, failures, blockages and leaks, which eventually lead to production shutdowns, are often significantly higher than the original purchasing price of the valve. Do not determine the purchase price of a valve without considering all relevant costs along the product life cycle.
KLINGER Fluid Control ball valves guarantee a perfect combination between technical performance and economic advantage. Initial costs, service-related costs, explicit and hidden costs that are incurred during the entire operating life of the valve must be considered. This is how plant owners should assess the long-term value of a valve. The life cycle phases are defined by the following variables.

Life Cycle Cost

- » Initial cost (purchase price)
- » Installation & commissioning cost (pipe welding, crane, hoists etc.)
- » Operation costs (pressure losses)
- » Maintenance and repair costs
- » Down time costs (loss of production)
- » Decommissioning / disposal costs

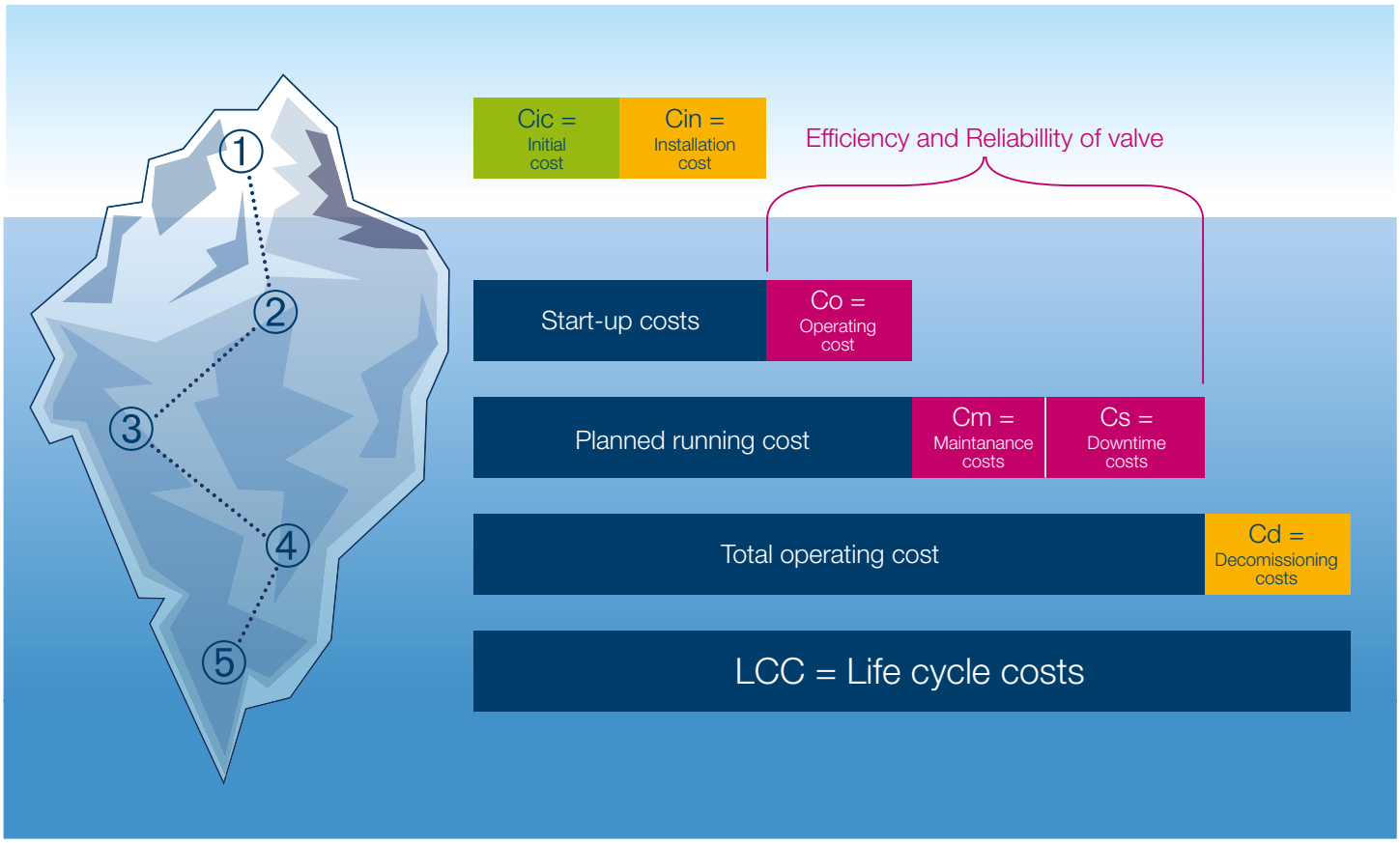

① **Cic** = Initial cost + **Cin** = Installation costs

② Start-up costs + **Co** (Operating costs (Co) are costs associated with keeping the plant running (more specifically energy costs associated with pressure loss).

③ Planned running costs + **Cm** + **Cs**
Cm = Maintenance costs for KLINGER Fluid Control ball valves are very low due to the avoidance of the following: Operating and checking the valve on a regular basis. Dismantling the valve to change the sealing element. Installation of the repaired or a new valve in the line

Cs = Downtime costs can be very high. To empty the pipe, repair the valve as well as refill and test the network section can generate 20 to 30 % additional costs on top of the cost for the downtime.

④ Total operating Costs + **Cd** (Decommissioning cost, which is the cost incurred by companies in reversing the modifications made to landscape when a fixed asset is used up).

MONOBALL KHO

TYPE OVERVIEW

KHO-S

KHO-F

KHO-SF

KHO-S >= DN80

KHO-F >= DN80

KHO-KK

KHO-U-KMR

KHO-U

MONOBALL KHO

Welding ends

GENERAL FEATURES
- Fully welded ball valve with full and reduced bore
- Floating ball design, hollow ball with guiding DN 80 upwards
- High degree of resilience against pipework forces

CONNECTIONS
Welding ends in accordance with AGFW worksheet FW 401 – Part 5

DIMENSIONS
Length according to manufacturer standard

ACCEPTANCE TESTING
- Seat leak tightness: EN 12266-1 P12, leakage rate A
- Tightness to atmosphere: EN 12266-1 P11
- Strength: EN 12266-1 P10

TEMPERATURE RANGE
-5°C to +200°C

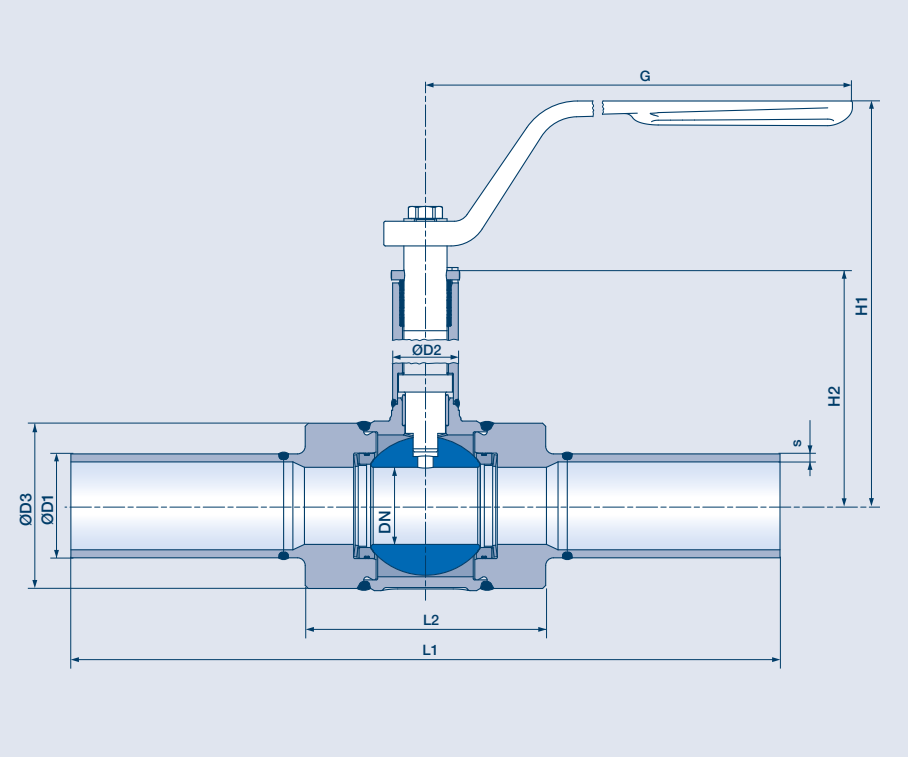

FULL BORE

DN	PN	L1	L2	H1	H2	G	ØD1	s	ØD2	ØD3	Weight
15	40	210	55	124	72	130	21,3	2,3	17,2	38	0,8
20	40	230	70	135	81	160	26,9	2,6	21,3	49	1,3
25	40	230	78	139	85	160	33,7	2,6	21,3	55	1,6
32	40	260	94	154	111	252	42,4	3,2	26,9	67	3
40	40	260	75	162	119	252	48,3	3,2	26,9	84	3,3
50	40	300	93	198	151	311	60,3	3,2	33,7	101	5,8
65	40	300	115	208	161	311	76,1	3,2	33,7	125	8,9
80	40	310	130	234	183	503	88,9	3,6	48,3	151	15
100	40	325	155	250	198	503	114,3	3,6	48,3	185	23
125	40	290	205	266	221	651	139,7	3,6	48,3	231	38,5

REDUCED BORE

DN	PN	L1	L2	H1	H2	G	ØD1	s	ØD2	ØD3	Weight
20R15	40	230	71	124	72	130	26,9	2,6	17,2	38	1
25R20	40	230	78	135	81	160	33,7	2,6	21,3	49	1,5
32R25	40	260	94	139	85	160	42,4	2,6	21,3	55	2,1
40R32	40	260	96	154	111	252	48,3	3,2	26,9	67	3
50R40	40	300	73	162	119	252	60,3	3,2	26,9	84	3,8
65R50	40	300	82	198	151	311	76,1	3,2	33,7	101	6,4
80R65	40	310	115	208	161	311	88,9	3,6	33,7	125	9,6
100R80	40	325	125	234	183	503	114,3	3,6	48,3	151	17
125R100	40	290	155	234	198	503	139,7	3,6	48,3	185	25
150R125	40	370	175	266	221	651	168,3	4	48,3	231	43

MONOBALL KHO

Flange

GENERAL FEATURES
- Fully welded ball valve with full and reduced bore
- Floating ball design, hollow ball with guiding DN 80 upwards
- High degree of resilience against pipework forces

CONNECTIONS
Flange connection according to EN1092-1

DIMENSIONS
Length according to EN558-1, series 1

ACCEPTANCE TESTING
- Seat leak tightness: EN 12266-1 P12, leakage rate A
- Tightness to atmosphere: EN 12266-1 P11
- Strength: EN 12266-1 P10

TEMPERATURE RANGE
-5°C to +200°C

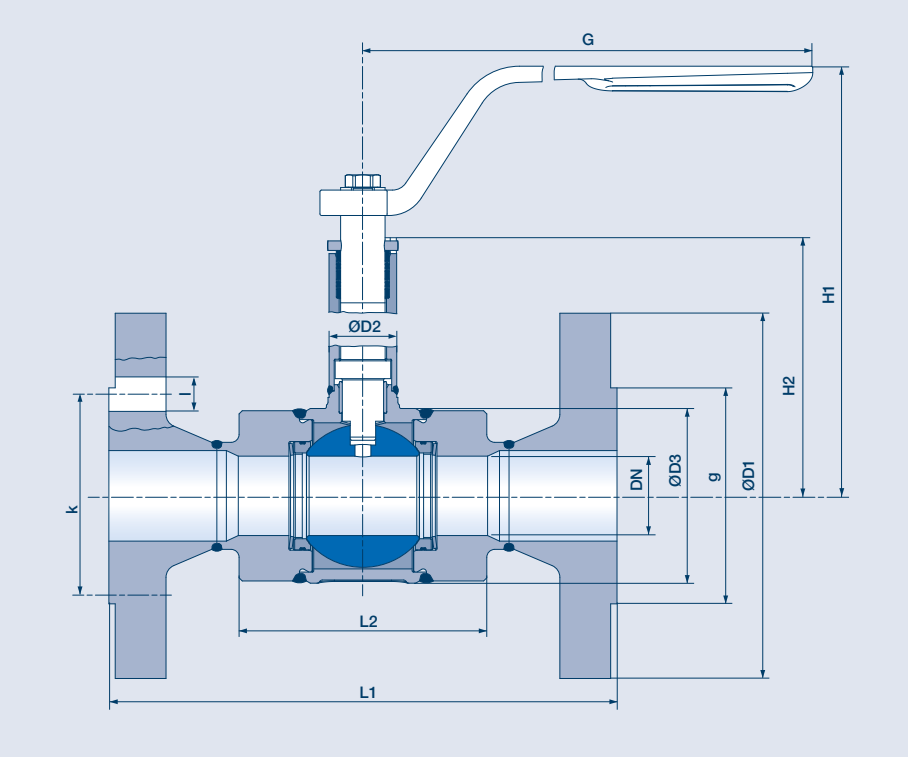

FULL BORE

DN	PN	L1	L2	H1	H2	G	ØD1	g	k	l	n	ØD2	ØD3	Weight
15	40	130	55	124	72	130	95	45	65	14	4	17,2	38	2,1
20	40	150	70	135	81	160	105	58	75	14	4	21,3	49	3,2
25	40	160	78	139	85	160	115	68	85	14	4	21,3	55	3,9
32	40	180	94	154	111	252	140	78	100	18	4	26,9	67	6,2
40	40	200	75	162	119	252	150	88	110	18	4	26,9	84	7,2
50	40	230	93	198	151	311	165	102	125	18	4	33,7	101	10,8
65	40	290	115	208	161	311	185	122	145	18	8	33,7	125	15,8
65	16	290	115	208	161	311	185	122	145	18	4	33,7	125	14,7
80	40	310	130	234	183	503	200	138	160	18	8	48,3	151	24
100	40	350	155	250	198	503	235	162	190	22	8	48,3	185	35
100	16	350	155	250	198	503	220	158	180	18	8	48,3	185	31,5
125	40	400	205	266	221	651	270	188	200	26	8	48,3	231	52
125	16	400	205	266	221	651	250	188	210	18	8	48,3	231	48,5

REDUCED BORE

DN	PN	L1	L2	H1	H2	G	ØD1	g	k	l	n	ØD2	ØD3	Weight
20R15	40	150	71	124	72	130	105	58	75	14	4	17,2	38	2,9
25R20	40	160	78	135	81	160	115	68	85	14	4	21,3	49	3,7
32R25	40	180	94	139	85	160	140	78	100	18	4	21,3	55	5,3
40R32	40	200	96	154	111	252	150	88	110	18	4	26,9	67	6,9
50R40	40	230	73	162	119	252	165	102	125	18	4	26,9	84	8,9
65R50	40	290	82	198	151	311	185	122	145	18	8	33,7	101	13,2
65R50	16	290	82	198	151	311	185	122	145	18	4	33,7	101	12,2
80R65	40	310	115	208	161	311	200	138	160	18	8	33,7	125	18,3
100R80	40	350	125	234	183	503	235	162	190	22	8	48,3	151	29
100R80	16	350	125	234	183	503	220	158	180	18	8	48,3	151	25,5
125R100	40	400	155	234	198	503	250	188	210	18	8	48,3	185	42
125R100	16	400	155	234	198	503	270	188	200	26	8	48,3	185	37,5
150R125	40	480	175	266	221	651	300	218	250	26	8	48,3	231	65
150R125	16	480	175	266	221	651	285	212	240	22	8	48,3	231	58

MONOBALL KHO

Welding ends / flange

GENERAL FEATURES
- Fully welded ball valve with full and reduced bore
- Floating ball design, hollow ball with guiding DN 80 upwards
- High degree of resilience against pipework forces

CONNECTIONS
Flange connection according to EN1092-1
Welding ends in accordance with AGFW worksheet FW 401 – Part 5

DIMENSIONS
Length according to manufacturer standard

ACCEPTANCE TESTING
- Seat leak tightness: EN 12266-1 P12, leakage rate A
- Tightness to atmosphere: EN 12266-1 P11
- Strength: EN 12266-1 P10

TEMPERATURE RANGE
-5°C to +200°C

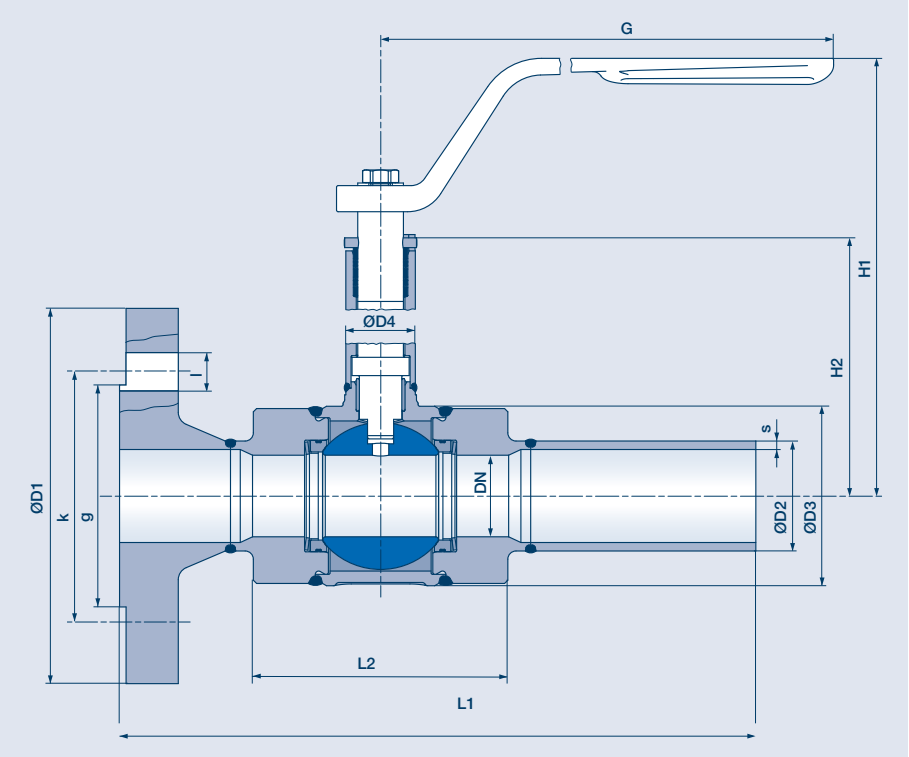

FULL BORE

DN	PN	L1	L2	H1	H2	G	ØD1	g	k	l	n	ØD2	s	ØD3	ØD4	Weight
15	40	170	55	124	72	130	95	45	65	14	4	21,3	2,3	38	17,2	1,5
20	40	190	70	135	81	160	105	58	75	14	4	26,9	2,6	49	21,3	2,3
25	40	195	78	139	85	160	115	68	85	14	4	33,7	2,6	55	21,3	2,8
32	40	220	94	154	111	252	140	78	100	18	4	42,4	2,6	67	26,9	4,6
40	40	230	75	162	119	252	150	88	110	18	4	48,3	3,2	84	26,9	5,3
50	40	265	93	198	151	311	165	102	125	18	4	60,3	3,2	101	33,7	8,3
65	40	295	115	208	161	311	185	122	145	18	8	76,1	3,2	125	33,7	12,4
65	16	295	115	208	161	311	185	122	145	18	4	76,1	3,2	125	33,7	11,8
80	40	310	130	234	183	503	200	138	160	18	8	88,9	3,6	151	48,3	19,5
100	40	338	155	250	198	503	235	162	190	22	8	114,3	3,6	185	48,3	29
100	16	338	155	250	198	503	220	158	180	18	8	114,3	3,6	185	48,3	27,5
125	40	345	205	266	221	651	270	188	200	26	8	139,7	3,6	231	48,3	47
125	16	345	205	266	221	651	250	188	210	18	8	139,7	3,6	231	48,3	44,5

REDUCED BORE

DN	PN	L1	L2	H1	H2	G	ØD1	g	k	l	n	ØD2	s	ØD3	ØD4	Weight
20R15	40	190	71	124	72	130	105	58	75	14	4	26,9	2,6	38	17,2	1,9
25R20	40	195	78	135	81	160	115	68	85	14	4	33,7	2,6	49	21,3	2,6
32R25	40	220	94	139	85	160	140	78	100	18	4	42,4	2,6	55	21,3	3,7
40R32	40	230	96	154	111	252	150	88	110	18	4	48,3	3,2	67	26,9	5
50R40	40	265	73	162	119	252	165	102	125	18	4	60,3	3,2	84	26,9	6,4
65R50	40	295	82	198	151	311	185	122	145	18	8	76,1	3,2	101	33,7	9,8
65R50	16	295	82	198	151	311	185	122	145	18	4	76,1	3,2	101	33,7	9,3
80R65	40	310	115	208	161	311	200	138	160	18	8	88,9	3,6	125	33,7	14
100R80	40	338	125	234	183	503	235	162	190	22	8	114,3	3,6	151	48,3	23
100R80	16	338	125	234	183	503	220	158	180	18	8	114,3	3,6	151	48,3	21,3
125R100	40	345	155	234	198	503	250	188	210	18	8	139,7	3,6	185	48,3	33,5
125R100	16	345	155	234	198	503	270	188	200	26	8	139,7	3,6	185	48,3	31
150R125	40	425	175	266	221	651	300	218	250	26	8	168,3	4	231	48,3	54
150R125	16	425	175	266	221	651	285	212	240	22	8	168,3	4	231	48,3	50,5

MONOBALL KHO

Welding ends / threaded stud

GENERAL FEATURES
- Fully welded ball valve with full and reduced bore
- Floating ball design, hollow ball with guiding DN 80 upwards
- High degree of resilience against pipework forces

CONNECTIONS
Threaded pin
Welding ends in accordance with AGFW worksheet FW 401 – Part 5

DIMENSIONS
Length according to manufacturer standard

ACCEPTANCE TESTING
- Seat leak tightness: EN 12266-1 P12, leakage rate A
- Tightness to atmosphere: EN 12266-1 P11
- Strength: EN 12266-1 P10

TEMPERATURE RANGE
-5°C to +200°C

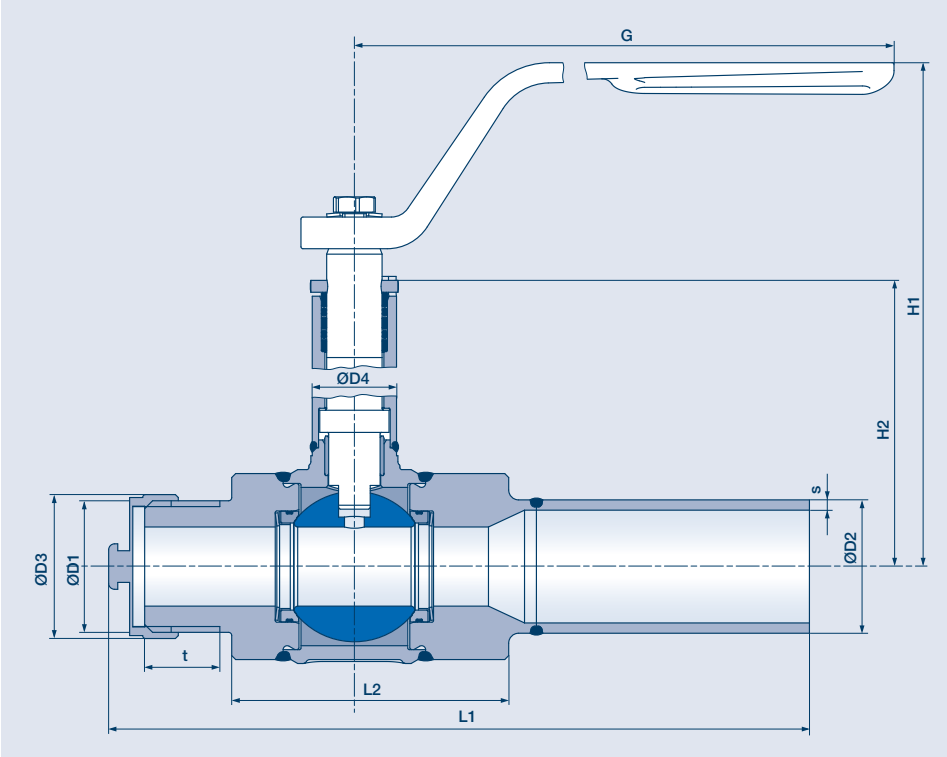

FULL BORE

DN	PN	L1	L2	H1	H2	G	ØD1	t	ØD2	s	ØD3	ØD4	Weight
15	40	153	49,5	124	72	130	1/2"	15	21,3	2,3	38	17,2	0,7

REDUCED BORE

DN	PN	L1	L2	H1	H2	G	ØD1	t	ØD2	s	ØD3	ØD4	Weight
20R15	40	165	58,5	124	72	130	3/4"	16	26,9	2,6	38	21,3	0,8
25R20	40	177	70	135	81	160	1"	19	33,7	2,6	49	21,3	1,4

MONOBALL KHO

With ISO flange

GENERAL FEATURES
- Fully welded ball valve with full and reduced bore
- Certified according to EN 488:2019
- Floating ball design, hollow ball with guiding DN 80 upwards
- High degree of resilience against pipework forces

ACCEPTANCE TESTING
- Seat leak tightness: EN 12266-1 P12, leakage rate A
- Tightness to atmosphere: EN 12266-1 P11
- Shell-Strength: EN 12266-1 P10

AUTOMATION
Flange connection according to ISO 5211 enables direct construction of an actuator or via console

TEMPERATURE RANGE
-5°C to +200°C

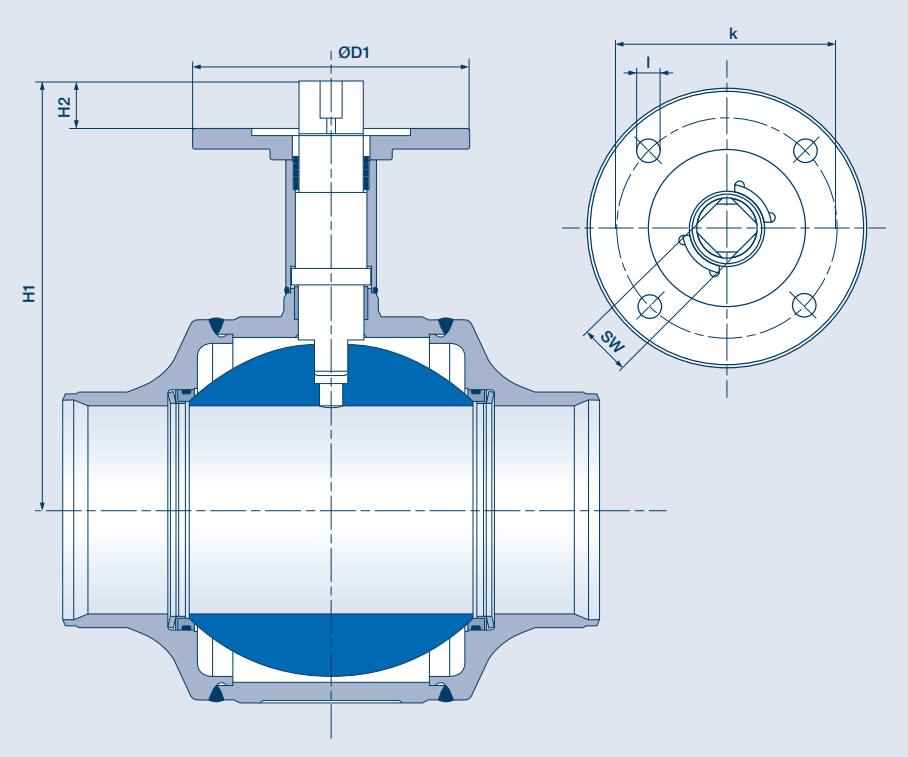

FULL BORE

DN	PN	ISO flange	H1	H2	ØD1 F10	l F10	k F10	ØD1 F12	l F12	k F12	SW
80	40	F10/F12	212	25	125	11	102	150	13	125	22
100	40	F10/F12	227	25	125	11	102	150	13	125	22
125	40	F10/F12	256	28	125	11	102	150	13	125	27

REDUCED BORE

DN	PN	ISO flange	H1	H2	ØD1 F10	l F10	k F10	ØD1 F12	l F12	k F12	SW
100R80	40	F10/F12	212	25	125	11	102	150	13	125	22
125R100	40	F10/F12	227	25	125	11	102	150	13	125	22
150R125	40	F10/F12	256	28	125	11	102	150	13	125	27

BALL VALVES FOR UNDER-GROUND UTILIZATION

Guaranteed reliability under challenging conditions

In order to be used in directly buried hot water networks, KLINGER Monoball KHO ball valves can also be provided in a pre-insulated underground design, which has been specifically developed for district heating systems. Different levels of insulation thickness and leakage alert systems are available. The ball valves can optionally be fitted with valves for draining and venting.

THE SYSTEM FOR UNDERGROUND SOLUTIONS

The precise depth is rarely known when ordering the valve. In order to avoid false operation and mistakes, the actuation mechanism and the actuator position indicator should always be below the cover of the street cap. KLINGER® offers extension adapters, which enable the adaptation of the already insulated and installed valves to the actual depth by means of simple reduction at the construction site. The underground extensions, which can be reduced in length, are available in the following lengths: 1 m, 1.5 m and 2 m, in three different versions. Depending on the nominal width, they can be operated either with a T-wrench or with a mobile and practical mounted gearbox. PE sleeve pipes with a screw cap to protect the extensions are correspondingly on offer.

DRAIN AND VENT VALVE

Safe draining and venting

KLINGER® drain and vent valve enable the safe draining and venting of district heating underground pipe systems. In addition to numerous standard variants for a wide range of operational needs, customer-specific special solutions can also be supplied.

DESIGN

The main component of every KLINGER® drain and vent valve is a fully welded, maintenance-free and durable Monoball KHO ball valve made of rust and acid-proof stainless steel. The ball valve is fitted with a factory-default welded-on carbon steel pipe. Alternatively, multiple connection types (threaded sleeve, screwed end, welding end or flange) can be selected. Delivery options, depending on the connection type, also include e.g. a threaded plug with a relief groove or a blind flange with a test plug for tightness checks in order to ensure a high degree of operational safety against scalding. The valve is pre-insulated in accordance with series 1 as a standard. If so desired, the valve can additionally be fitted with a leak detection cable and/or a special cable outlet. Triple sealing on the uncoated ball valve body, comprising a heat-shrinking end cap, a special bitumen casting compound and a pivot bolt clamp made from rust and acid-proof stainless steel, guarantees safe and long-term protection against moisture penetration.

Fig. 1: Example of a drain and vent valve with flange

INSTALLATION

The factory-side, ready-made components enable quick installation. The adaptation to the depth at the construction site can be executed without major effort.

OPERATING TYPES

The valve is either operated by means of hexagon head or via an actuation device with a hand lever. In the case of the hand lever design, the actuator position is derived from the position of the hand lever. With regard to hexagon head, a positional notch milled into the front face of the hexagon head and a red indicator tip form a clear position indicator.

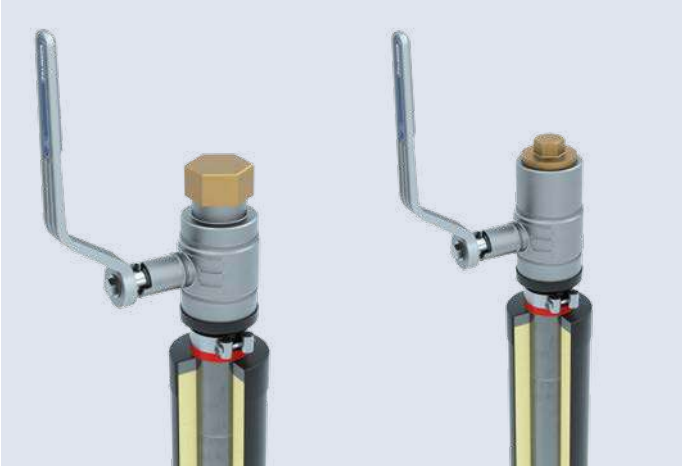

Fig. 2: Example of a drain and vent valve with end cap

TECHNICAL DETAILS

Application design

Pressure and temperature range

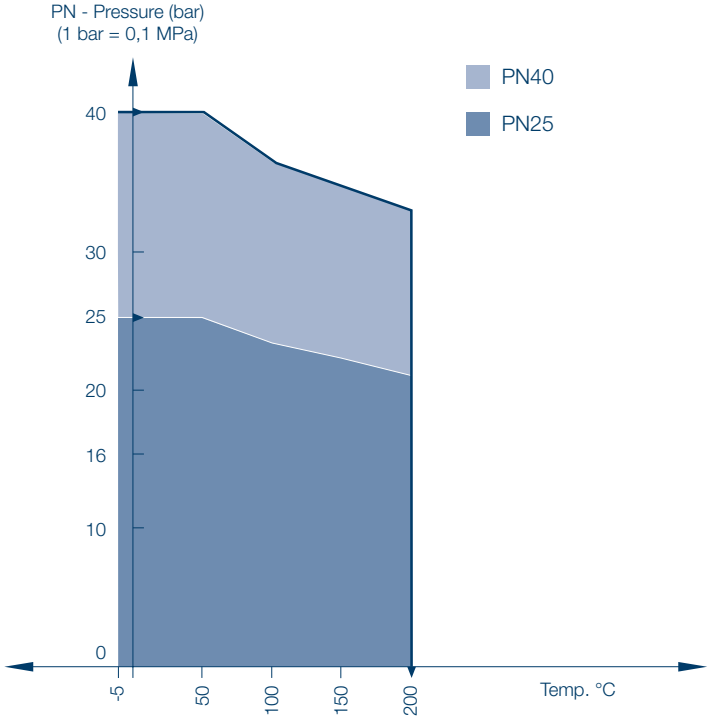

Torques

Nominal diameter DN	Differential pressure	Torque
mm	bar	Nm
15 / 20R15	40	8
20 / 25R20	40	12
25 / 32R25	40	20
32 / 40R32	40	28
40 / 50R40	40	42
50 / 65R50	40	60
65 / 80R65	40	110
80 / 100R80	40	190
100 / 125R100	40	320
125 / 150R125	40	490

For standard computations, KLINGER Fluid Control recommends the factor 1.5, i.e. using plus 50 %.

Flow Values

FULL BORE

DN (mm)	ζ	K_{vs}-Wert
15	0,389	14,4
20	0,405	25,1
25	0,310	44,8
32	0,265	79,5
40	0,185	149
50	0,103	312
65	0,099	537
80	0,156	647
100	0,127	1119
125	0,097	2004,4

REDUCED BORE

DN (mm)	ζ	K_{vs}-Wert
20R15	1,470	13,2
25R20	1,052	24,4
32R25	1,273	36,3
40R32	0,881	68,1
50R40	0,787	113
65R50	0,922	176
80R65	0,624	324
100R80	0,687	482
125R100	0,689	752
150R125	0,526	1240

SIZE OF BALL VALVE

Flow rate	Q	in m³/h
Pressure loss	Δp	in bar
Density	ρ	in kg/m³
Velocity	w	in m/s
Flow coefficient	K_v	in m³/h
Pressure loss coefficient	ζ	

Allows for the calcu-

$$K_v = Q * \sqrt{\frac{\rho}{1000 * \Delta p}}$$

or

$$\zeta = \frac{2 * \Delta p * 10^5}{\rho * w^2}$$

The valve is to be selected in a manner that the K_v-value is greater, or the ζ-value less than the computed value for the application.

TECHNICAL DETAILS

Bill of material

Parts list

Pos.	number	name	material
1	1	Housing	1.0619
2	2	End-piece	S355J / S235J / 1.0619
3	1	Operating Shaft	1.4104
4	1	Ball	1.4308
5	1	Shaft	P235GH / P265GH
6	2	Belleville washer	1.4310
7	2	Sealing ring holder	1.4301
8	2	Sealing ring	KFC-25
9	2	O-Ring	FKM
10	1	Bearing bush	St/Bz/PTFE
11	1	Bearing disc	KFC-15
12	2	O-Ring	FEPM
13	2	Spacer	KFC-25
14	1	Spacer	1.4104
15	1	Grooved pin	1.4305
16	1	Hand lever	1.4408
17		Weld-on pipe	P235GH / P265GH
18		Flange end	P250GH
19	1	Washer	1.4310
20	1	Hexagon nut	A4

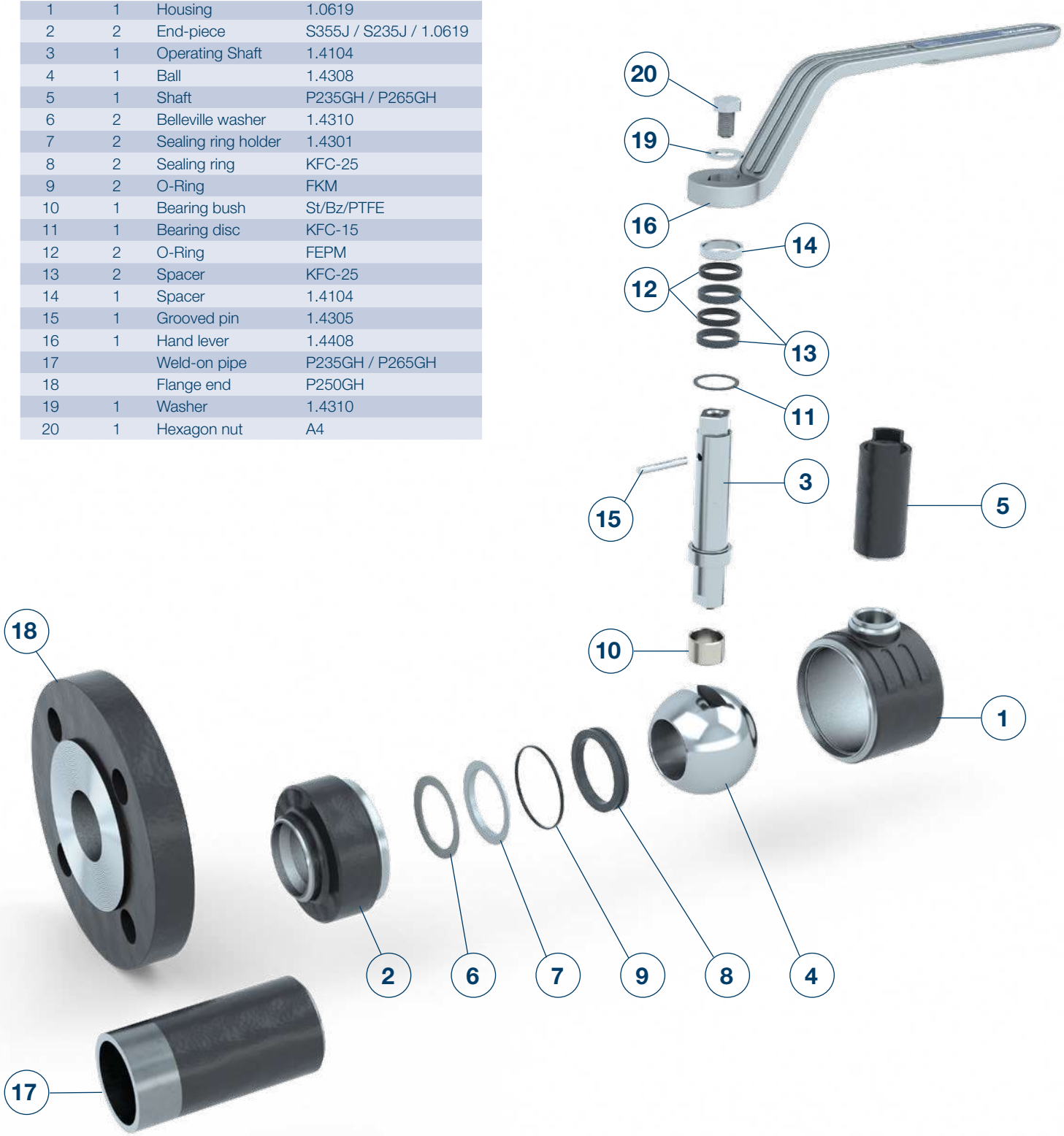

KLINGER Portugal

Klinger Portugal, Lda.
Via José Régio, 36
Centro Empresarial Vilar do Pinheiro
4485-860 Vila do Conde
T: +351 22 947 0910
E-mail: geral@klinger.pt